CP-1 & 2 CIRCULATION PUMPS

ARMSTRONG

E.2 SERIES CIRCULATORS | E7.2/E7.2B |

SUBMITTAL

File No: 10.590
Date: OCTOBER 08, 2014
Supersedes: 10.590
Date: JUNE 25, 2012

Job: _____ Representative: _____

_____ Order no.: _____ Date: _____

Engineer: _____ Submitted by: _____ Date: _____

Contractor: _____ Approved by: _____ Date: _____

QUANTITY	TAG NO.	PART NUMBER	FLOW (USgpm)	HEAD (FEET)	VOLTAGE	PHASE	COMMENTS
2	CP-1, 2	E7.2B	12 GPM	13' TDH	120	1	

TECHNICAL DATA

Flow range: 0 to 38.0 USgpm (0 to 2.4 L/s)
Head range: 0 to 26.0 feet (0 to 7.9 m)
Max/Min fluid temp: 230°F/40°F (110°C/4°C)
Max. Working pressure: 150 psi (1034 kPa)

MOTOR DATA

Voltage	120V	208V	240V
Full load amp draw	1.5A	0.8A	0.8A

Nominal power: ⅙ hp (125W) **Frequency:** 60 Hz
Motor type: Two pole, Single phase **Speed:** 3400 rpm

MATERIALS OF CONSTRUCTION

Pump body: Cast iron (closed sytems)
Bronze (lead free for open systems)

Face plate: Stainless steel **Shaft:** Stainless steel
Impeller: 30% Glass-filled noryl **Volute gasket:** EPDM
Bearings: Permanently lubricated stainless steel
Seal: Silicon carbide enviroseal c/w viton elastomer

MOUNTING ORIENTATION FOR INDOOR USE ONLY

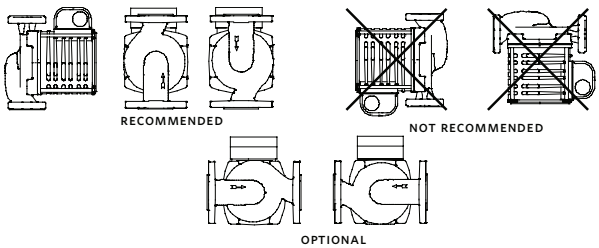

PART NUMBER

	120V	240V
E7.2	182202-643	182202-671
E7.2B	182202-644	182202-672

E7.2/E7.2B ACCESSORIES

- ¾" Flange kits
- 1" Flange kits
- 1¼" Flange kits
- 1½" Flange kits
- Timer
- Aquastat
- Spool pieces

PERFORMANCE CURVE

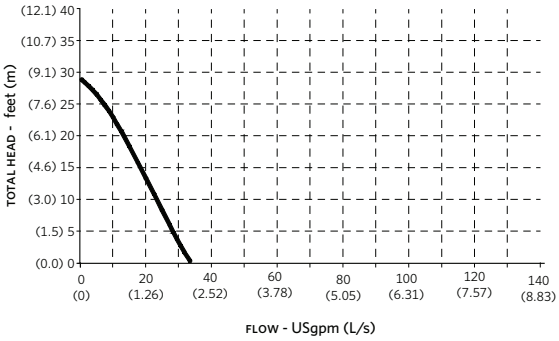

Performance curves are for reference only. Confirm current performance data with Armstrong ACE ONLINE selection software.

CP-1 & 2 CIRCULATION PUMPS

2

DIMENSIONS inches (mm)									SHIP. WEIGHT
MODEL	BODY	A	B	C	D	E	F	CONNECTION TYPE & SIZE	lbs (kgs)
E7.2	Cast iron	7.10 (180)	6.40 (164)	5.50 (140)	3.80 (97)	3.20 (81)	4.20 (107)	1.25" diameter 2-bolt flanges	13.1 (5.94)
E7.2B	Bronze	7.10 (180)	6.40 (164)	5.50 (140)	3.80 (97)	3.20 (81)	4.20 (107)	1.25" diameter 2-bolt flanges	13.3 (6.03)

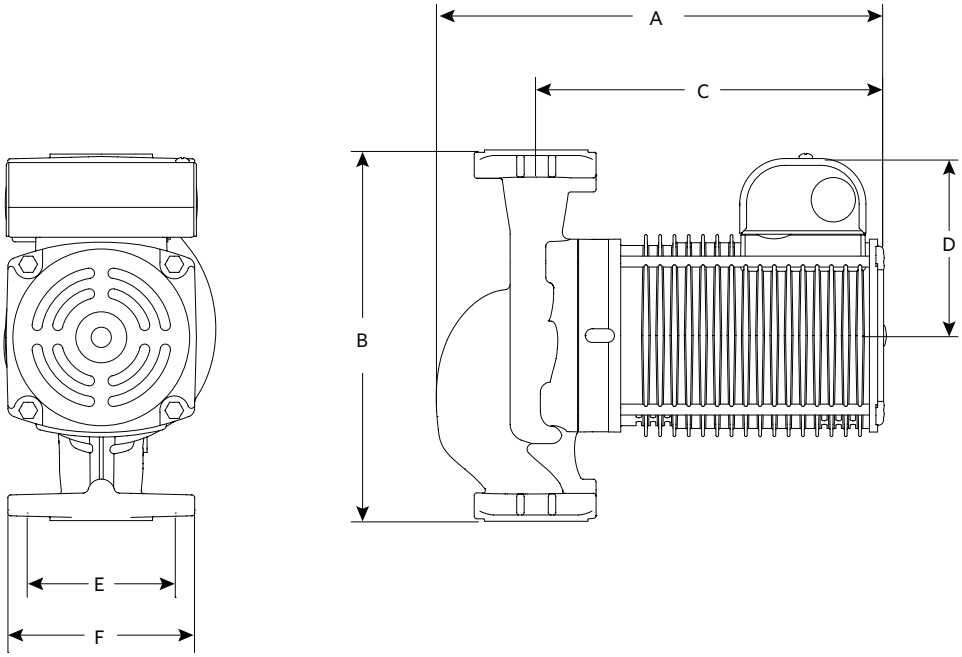

TORONTO
+416 755 2291

BUFFALO
+716 693 8813

BIRMINGHAM
+44 (0) 8444 145 145

MANCHESTER
+44 (0) 8444 145 145

BANGALORE
+91 (0) 80 4906 3555

SHANGHAI
+86 21 3756 6696

CP-1 & 2 CIRCULATION PUMPS

tekmar® Submittal
Pump Sequencer 132

Multi-Staging

C 132
01/11

Replaces: New

Job _____ Designer _____ Contact _____

The Pump Sequencer 132 is designed to operate 2 pumps by providing stand by or staging operation. It can be used in a wide range of applications, including residential installations using a backup system pump to commercial applications that require energizing a second stage for increased flow or head. The main function of the 132 is to provide lead lag capability to a standby pump setup, or to provide staging capability for a dual pump installation. The 132 can energize up to 2 pumps, as well as provide alert contacts that can be used in the event of a failure.

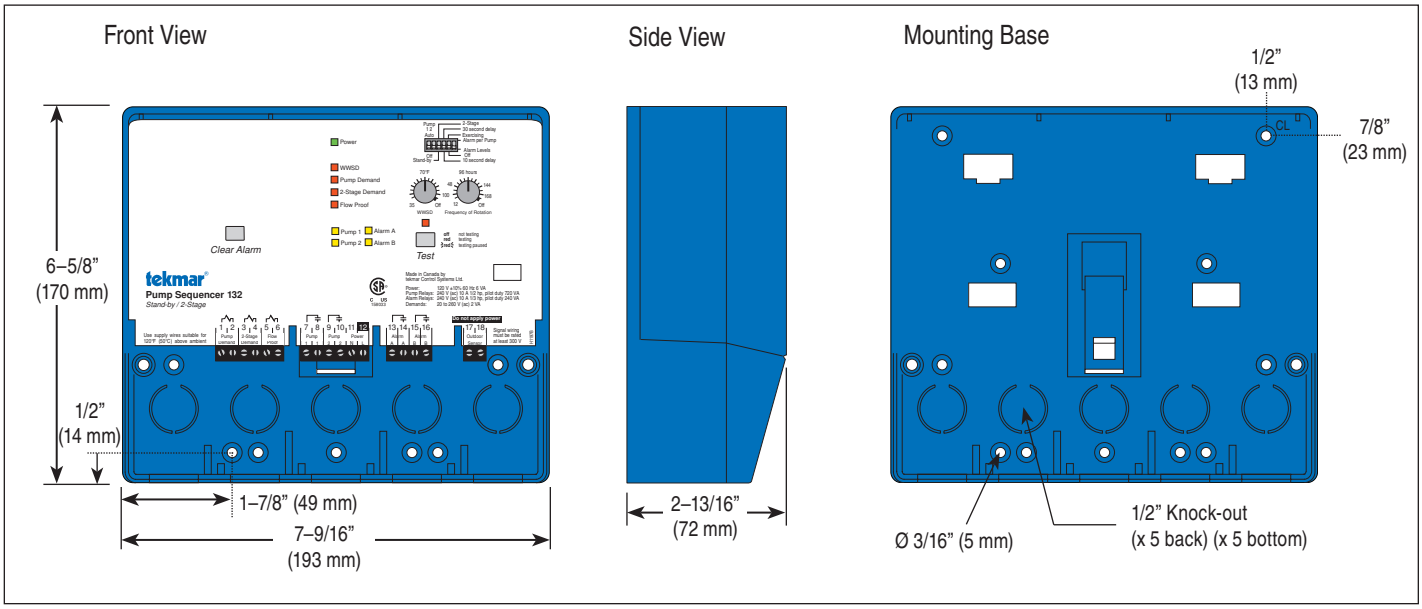

Specifications

Pump Sequencer 132 *Stand-by / 2-Stage*	
Literature	D132, A132, D001
Control	Microprocessor control. This is not a safety (limit) control
Packaged weight	2.9 lb. (1320 g)
Dimensions	6-5/8" H x 7-9/16" W x 2-13/16" D (170 x 193 x 72 mm)
Enclosure	Blue PVC plastic, NEMA type 1
Approvals	CSA C US, meets class B: ICES & FCC Part 15
Ambient conditions	Indoor use only, 32 to 120°F (0 to 50°C), RH ≤90% Non-condensing
Power supply	120 V ±10%, 50/60 Hz, 6 VA
Pump relays	240 V (ac) 10 A 1/2 hp
Alert relays	240 V (ac) 10 A 1/3 hp
Demands	20 to 260 V (ac) 2 VA
Sensors	NTC thermistor, 10 kΩ @ 77°F (25°C ±0.2°C) ß=3892
–Optional	Outdoor Sensor 070
Warranty	Limited 3 Year (See D132 for full warranty)

Energy Saving Features
- Warm Weather Shut Down

Additional Features
- Equal Run Time Rotation
- Lead lag operation
- 2 Stage capability
- Exercising
- Alert per pump or alert levels
- Adjustable flow proof delay
- Test sequence
- CSA C US certified
  (approved to applicable UL standards)

SPECIAL REQUIREMENTS
N / A

© 2011 tekmar® C 132 - 01/11